DSX 485T
Mux/Repeater

DSX-485T Two Channel Mux/Repeater

2 Channel RS-485 Mux/Repeater. Used to Split RS-485 Communications into two paths. Also used to convert old RS-422 DSX-1032 Controllers to RS-485. Installed at each old DSX-1032 Controller causes them to communicate like newer controllers.

Can also be used in same applications as DSX-1035 except it has 2 RS-485 Outputs instead of 4.

1 – RS-485 Input / 2 – RS-485 Outputs

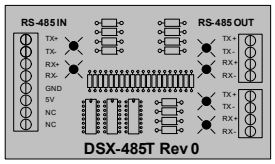

Size

3.5” W x 2.5” H x .75” D

Weight

2 oz.

Power Requirements

5VDC @ 30ma
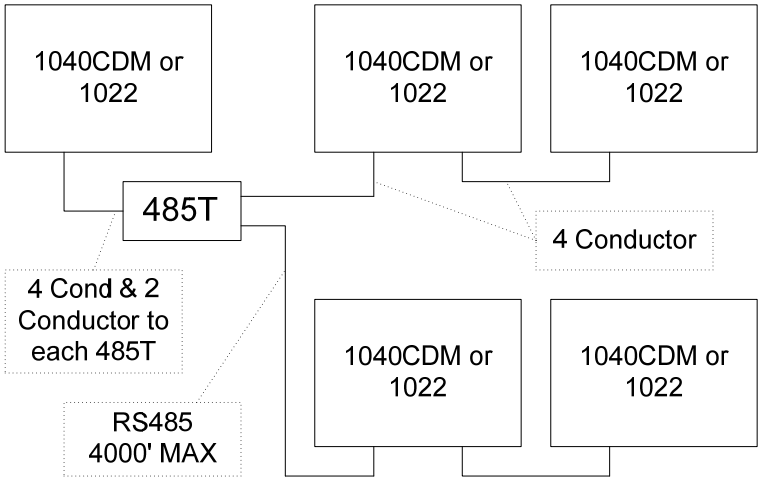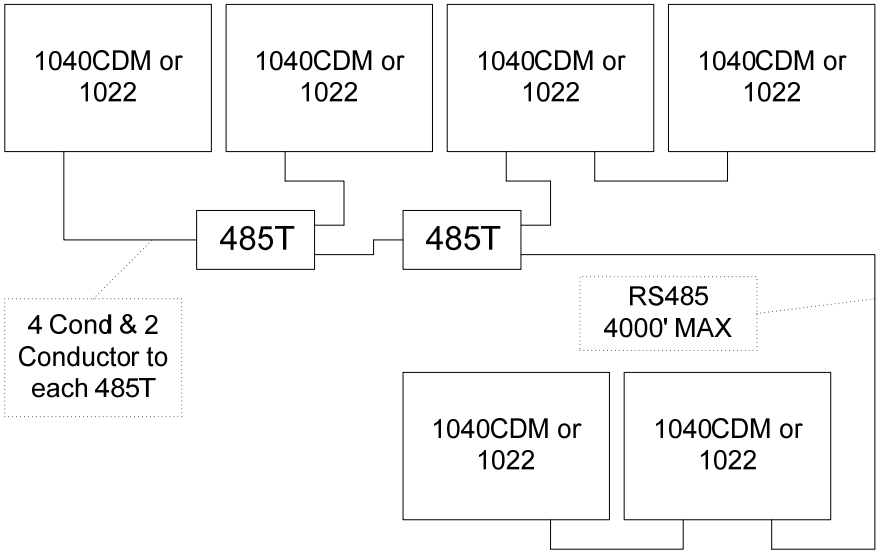
DSX-485T Typical Application